Owner Instructions

Warning!
Read instructions before using the machine

HVR 160-11
HET 160-11

Numatic INTERNATIONAL

www.myhenry.co.uk

Kit AS-0

Assembly

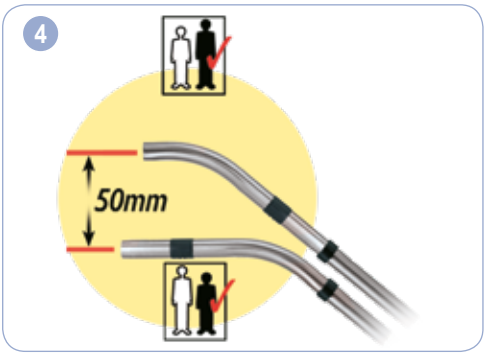

Start
Power
on light

Low

Low

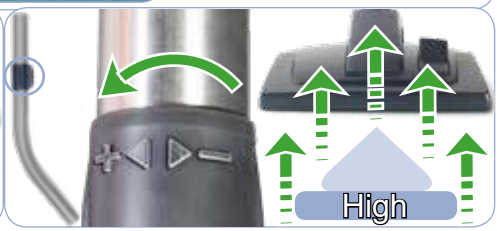
High

1
2

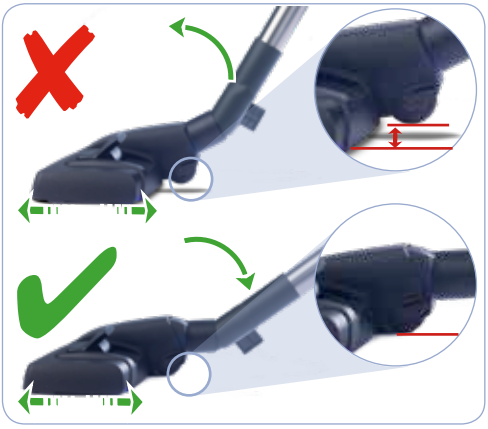

1
2
3
4
5
Henry
160

6
7
8
2
1
Henry

9
10
Henry
160

Fitting the face

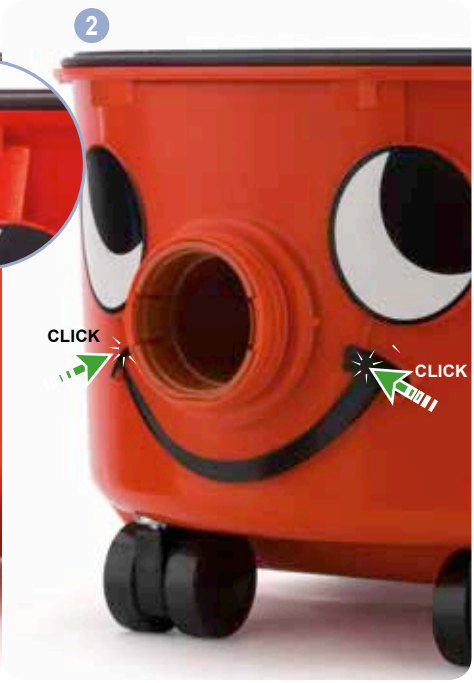

Removing the face

Wand docking

Tool tidy

1. Voltage
2. Frequency
3. Rated Input Power
4. Weight (ready to work)
5. Company Name & Address
6. Model
7. Machine yr/wk Serial number
8. WEEE Logo
9. Protection Class 2 Symbol
10. CE Mark

PPE (personal protective equipment) That may be required for certain operations.

Ear Protection | Safety Footwear | Head Protection | Safety Gloves | Eye Protection | Protective Clothing | Dust / Allergens Protection | Hi Vis Jacket

Caution Floor Sign

NOTE: A risk assessment should be conducted to determine which PPE should be worn.

Safety Critical Components

Mains leads:

HO5-V2V2-F 10 x 2 x 0.75 mm^2

WEEE Legislation
(Waste, Electrical and Electronic Equipment)

Vacuum cleaner, accessories and packaging should be sorted for environmentally - friendly recycling. (Only for EU Countries)
Do not dispose of vacuum cleaner into household waste! According to the European Directive 2012/19/EU on waste electrical and electronic equipment and its incorporation into national law.
Vacuum cleaners that are no longer suitable for use must be separately collected and sent for recovery in an environmentally - friendly manner.

Failure to rectify the problem or in the event of a breakdown contact your Numatic dealer or the Numatic Technical helpline +44 (0)1460 269268.

Daily

Keep the machine clean, including hoses and tubes.
Ensure the bag and filter are fitted.
Regularly examine the power cord.
Check dust bag frequently.
Check filters are clean.

Weekly - as daily and:-

Check for any worn or damaged parts and replace immediately.
Do not steam clean or pressure wash.

Information for dry use vacuum cleaners

Warning!

Ensure you read the instruction manual before using the machine.
Operators shall be adequately instructed on the use of these machines, as with all electrical equipment, care and attention must be exercised at all times during use, you must also make certain that routine and preventative maintenance is carried out periodically to ensure safe operation.
Failure to carry out maintenance as necessary, including the replacement of parts to the correct standard could render this equipment unsafe and the manufacturer can accept no responsibility in this respect.
This machine is for *DRY USE* only
You must disconnect the machine from the mains by removing the plug from the supply socket *BEFORE* cleaning or maintenance and when replacing parts or converting the machine to another function.
This appliance is intended to be assembled, cleaned and maintained by an adult.
This machine is not suitable for the collection of biological hazards, hazardous or explosive dusts. Contact your local distributor if you require a machine capable of performing these tasks.
This machine is not a toy; children shall not play with this machine.
The machine must not to be used by persons with reduced physical, sensory or mental capabilities, or lack of experience or knowledge, unless they have been given supervision or instruction.
You must not allow the supply cord to come into contact with rotating brushes (if fitted).

Caution

Only use the socket outlet on the machine for purposes specified in the instructions (where fitted).
This machine must not be stored outside, or used in wet environments, or to collect wet materials.
The vacuum cleaner should be stored in a dry place and is for indoor use only.

Notes

You must ensure that the filtration system fitted to the machine is suitable for the material being collected.
This product complies with the requirements of *IEC/EN 60335-2-69 2012*.
The primary use for this machine is commercial, for example in hotels, schools, hospitals, factories, shops and offices.
If the vacuum cleaner stops working, remove the plug from the wall before investigating where the fault lies.
If the vacuum cleaner has a blockage, switch off, remove the plug from the socket outlet, and inspect the floor tool, wands and hose for debris. If the floor tool, wands and hose are clear, replace the dust bag and clean the filter.
The vacuum cleaner should be inspected after use for damage.
The power light will illuminate, when your machine is connected to a suitable power supply (where fitted).

Do

- Keep your machine clean.
- Keep filters clean.
- Use filter bags, they will enhance performance and help keep machine clean.
- Use a Numatic original filter bag under fine dust conditions.
- Keep hoses and tubes clear.
- Replace any worn or damaged parts immediately.
- Regularly examine the power cord. If damage is found such as cracking or ageing the power cord must be replaced by a competent person using the correct Numatic original part.
- Change dust bag frequently.
- Keep diffuser filter (where fitted) clean.
- Only use the brushes provided with the machine. The use of other brushes may impair safety.

Don't

- Unreel the cable with one pull or pull on the cable to unplug the machine from the power supply.
- Use to suck up hot ashes or lighted cigarette ends.
- Use steam cleaners, pressure washers or immerse in water to clean the machine.
- Attempt machine maintenance or cleaning unless the power supply plug has been removed from the supply outlet.
- Use in a wet environment or to collect wet materials.
- Store your machine in wet conditions.

Data

Drum Size	Cleaning Range	Weight (Ready to work)	Sound Pressure
6 L	26.1 m	7.5 kg	64 dB (A) Uncertainty 0.5 dB

Protection Class	Size
Class II	320 x 340 x 345 mm

Sound power level	**db (A)**	72

Schematic diagram

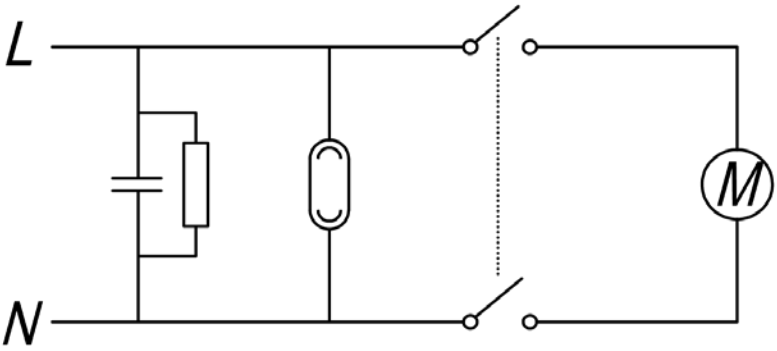

EU, EC, EL, UE, ES:
Declaration of Conformity
Prohlášení o shodě
Konformitätserklärung
Overensstemmelseserklæring
Declaración de conformidad
Vastavusdeklaratsioon
Déclaration de conformité

Декларация за съответствие
Δήλωση συμμόρφωσης
Megfelelőségi nyilatkozat
Dichiarazione di conformità
Atitikties deklaracija
Conformiteitsverklaring
Samsvarserklæring
Declaração de conformidade

Deklaracja zgodności
Declaratie de conformitate
Декларация о соответствии
Försäkran om överensstämmelse
Izjava o skladnosti
Vaatimustenmukaisuusvakuutus

Manufacturer: / Výrobce / Hersteller / Fabrikant / Fabricante / Tootja / Fabricant / производитель / Κατασκευαστής / Gyártó / Fabbricante / Gamintojas / Fabrikant / Produsent / Fabricante / Producent / Producător / производитель / Tillverkare / Proizvajalca / Valmistaja:	Numatic International Limited Chard Somerset TA20 2GB www.numatic.co.uk
Product: / Produkt / Produkt / Produkt / Producto, Toodet, Produit / Продукт / Προϊόν / Termék / Prodotto / Produktas / Artikel / Produkt / Produtos / Produkt / Produs / товар / Produkt / Izdelka / Tuote:	HVR, HVN, NVR, NSR, VNR, HET, NRV, EVR, HVX, HMR, HHR, HVC, HEC, HEP, HRP, HDK, HLX, PET, PEH, HRR, HVT, PCH, HPC
Description: / Popis / Beschreibung / Beskrivelse / Descripción / Kirjeldus / La description / Описание / Περιγραφή / Leirás / Descrizione / Apibudinimas / Omschrijving / Beskrivelse / Descrição / Opis / Descriere / Описание / Beskrivning / Opis / Kuvaus:	Vacuum Cleaner – Commercial – Dry

GB **We, Numatic hereby declare under our sole responsibility, that the above-mentioned product(s) is/are in conformity with the following directives and standards.**

CZ My, Numatic prohlašujeme na svou výlučnou odpovědnost, že výše uvedený výrobek je ve shodě s následujícími směrnicemi a normami.

DE Wir, Numatic erklären in alleiniger Verantwortung, dass das oben genannte Produkt den folgenden Richtlinien und Normen entspricht.

DK Vi, Numatic erklærer hermed under eget ansvar at ovennævnte produkt(er) er i overensstemmelse med følgende direktiver og standarder.

ES Nosotros, Numatic declaramos bajo nuestra única responsabilidad que el producto antes mencionado está en conformidad con las siguientes directivas y normas

EE Meie, Numatic Käesolevaga kinnitame ja kanname ainuisikulist vastutust, et eespool nimetatud toode on kooskõlas järgmiste direktiivide ja

FR Numatic déclare sous notre seule responsabilité que le produit mentionné ci-dessus est conforme aux directives et normes suivantes.

BG Ние, Numatic С настоящото декларираме на своя лична отговорност, че посочените по-горе продуктът е в съответствие със следните директиви и стандарти.

GR Εμείς, Numatic δηλώνουμε με αποκλειστική μας ευθύνη, ότι το προαναφερόμενο προϊόν συμμορφώνεται με τις ακόλουθες οδηγίες και πρότυπα.

HU Mi, Numatic Kijelentjük, egyedüli felelősséggel, hogy a fent említett termék megfelel az alábbi irányelveknek és szabványoknak

IT Noi, Numatic dichiara sotto la propria responsabilità, che il prodotto di cui sopra è conforme alle seguenti direttive e norme.

LT Mes, "Numatic pareiškiu vienašališkos atsakomybės, kad pirmiau minėtas produktas atitinka šias direktyvas ir standartus

NL We verklaren Numatic hierbij op eigen verantwoordelijkheid, dat het bovengenoemde product voldoet aan de volgende richtlijnen en normen

NO Vi, Numatic erklærer herved under eget ansvar, at det ovennevnte produktet er i samsvar med følgende direktiver og standarder

PT Nós, a Numatic declaramos, sob nossa exclusiva responsabilidade, que o produto acima mencionado está em conformidade com as diretrizes e normas a seguir.

PL My, Numatic Niniejszym oświadczamy z pełną odpowiedzialnością, że wyżej wymieniony produkt jest zgodny z następującymi dyrektywami i normami.

RO Noi, Numatic Prin prezenta declarăm pe propria răspundere, că produsul mai sus menționat este în conformitate cu următoarele standarde și directive.

RU Ми, Нилфиск овим изјављујем под пуном одговорношћу, да наведеног производ је у складу са следећим директивама и стандардима.

SE Vi Numatic förklarar härmed under eget ansvar att ovan nämnda produkt överensstämmer med följande direktiv och normer.

SI Mi, Numatic izjavljamo s polno odgovornostjo, da je zgoraj omenjeni izdelek v skladu z naslednjimi smernicami in standardi.

FI Me, Numatic täten vakuutamme omalla vastuulla, että edellä mainittu tuote on yhdenmukainen seuraavien direktiivien ja standardien mukaisesti

2006/42/EC	**Machinery Directive**	**EN60335-1:2012 + AC:2014 + A11:2014** **EN60335-2-69:2012** **EN62233:2008**
2014/30/EU	**EMC Directive**	**EN55014-1:2006 + A1:2009 + A2:2011** **EN55014-2:1997 + A1:2001 + A2:2008** **EN61000-3-2:2014** **EN61000-3-3:2013**
2009/125/EC **EU/666/2013**	**Ecodesign Requirements for Vacuum Cleaners**	
2011/65/EU	**RoHS Directive**	

Authorised Signatory: Mr. Allyn Boyes

Position: Development Manager

Numatic International Limited

Chard,

Somerset, TA20 2GB, UK

Signed:

Date: 21st Jan 2019

Numatic International

Warranty

Numatic International Limited warrant to the original purchaser that its products are free of defects in both material or workmanship for the period shown below:-

Homecare and Cleancare Vacuum cleaners	**2 Years**
Rotary Floor Machines	**2 Years**
Twintec Auto Scrubber Dryer	**1 Year**
Vario Ride-On Scrubber Dryer	**1 Year / 1500 hours**
Mopping, Compacts, Combi and Servocare Products	**1 Year**
Individual Accessories and Spare Parts	**6 Months**

Note: This warranty expressly excludes consumable parts such as carbon brushes, floor brushes, mops, batteries etc, that are considered replaceable from time to time during the normal working life of the machine.

Using non Numatic dustbags can be detrimental to both machine performance and life and may invalidate the Warranty.

A. The warranty period commences from the date the goods are purchased.

B. All warranty claims must be processed through the Dealer from whom the equipment was purchased. The Dealer will co-operate with the purchaser throughout the warranty claims procedure and will arrange any necessary repairs using genuine Numatic parts.

C. If the original Dealer is no longer able to fulfil his obligations please contact Numatic International Limited with full details of the claim and proof of purchase so that this may be processed without delay.

D. Any warranty claim can only relate to the specific part that is proven to be at fault and for which a replacement will be supplied but cannot be extended to constitute a claim against the complete machine.

E. Numatic International will supply the Dealer with any warranty parts required, subject to the claim being validated, after return of the faulty items in accordance with Numatic International Limited's General Conditions of Sale.

F. Claims will not be accepted if they are the result of fair wear and tear, misuse or abuse of any kind.

G. No replacement will be given unless the appropriate evidence of the validity of the claim has been provided to the satisfaction of Numatic International Limited.

H. Numatic International Limited reserve the right to charge for any unnecessary work carried out as a result of an invalid claim.

I. No variation to this warranty may be made or implied by any member of Numatic International Limited or its Dealers unless such variation is in writing and authorised by the Company

Numatic International Limited. Chard, Somerset, TA20 2GB
Telephone: 01460 68600 Fax: 01460 68458

© Numatic International Limited

Replacement parts

TriTex Filter	
901607	Henry and Hetty TriTex Filter
HepaFlo Dust Bags	
909291	NVM 1CH (Pack of 3)
907076	NVM 1CH (Pack of 5)
907075	NVM 1CH (Pack of 10)

Distributed by

Numatic International Limited, Chard, Somerset, TA20 2GB
Telephone: 01460 68600
Fax: 01460 68458

UNITED KINGDOM: www.numatic.co.uk GERMANY: www.numatic.de SWITZERLAND: www.numatic.ch
FRANCE: www.numatic.fr NETHERLANDS: www.numatic.nl SOUTH AFRICA: www.numatic.co.za
PORTUGAL: www.numatic.pl SPAIN: www.numatic.es

Specification subject to change without prior notice

www.myhenry.co.uk © Numatic International Limited

910084 02/19 (A01)